FT 2019 - AEROSPACE TECHNOLOGY CONGRESS 2019

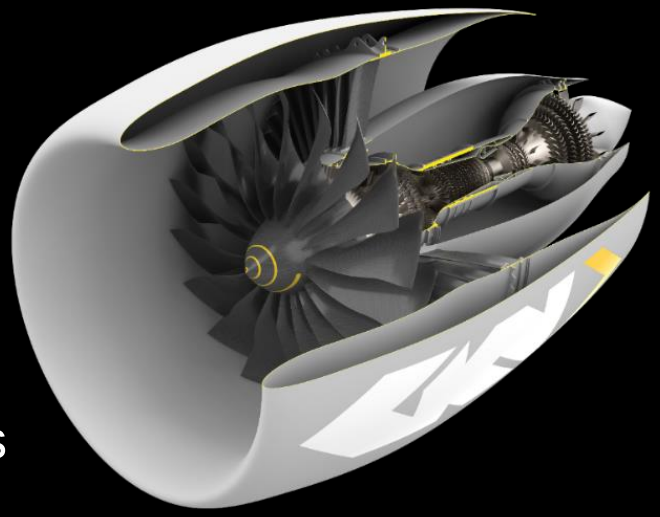

GKN Aerospace involvement the Clean Sky 2 engine demonstrators

Fredrik Wallin, Robert Lundberg, Anders Sjunnesson

2019-10-09

Core Partner on Major Demonstrators

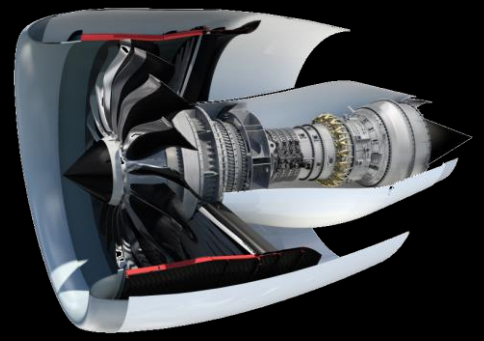

Ultra High Propulsion Efficiency – SAFRAN (WP2)

> GKN responsible for ICF & TRF

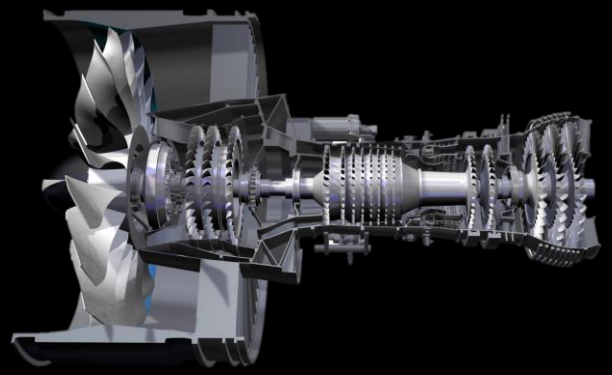

Advanced Geared Engine Configuration – MTU (WP4)

> GKN responsible for LPC/IMC & TEC/EE

Very High Bypass Ratio – Rolls-Royce (WP6)

> GKN responsible for ICC

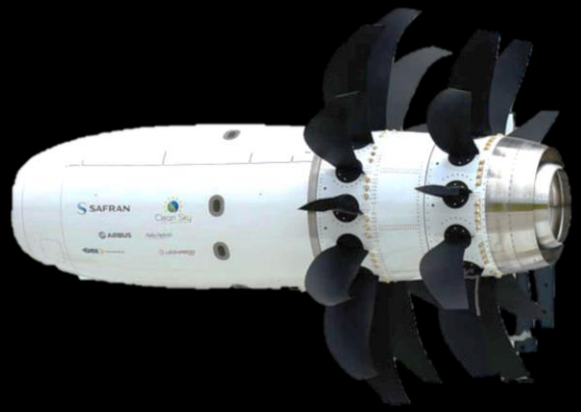

Open Rotor – Safran (LPA)

> GKN responsible for rotating frames

Clean Sky 2

GKN Notional Engine

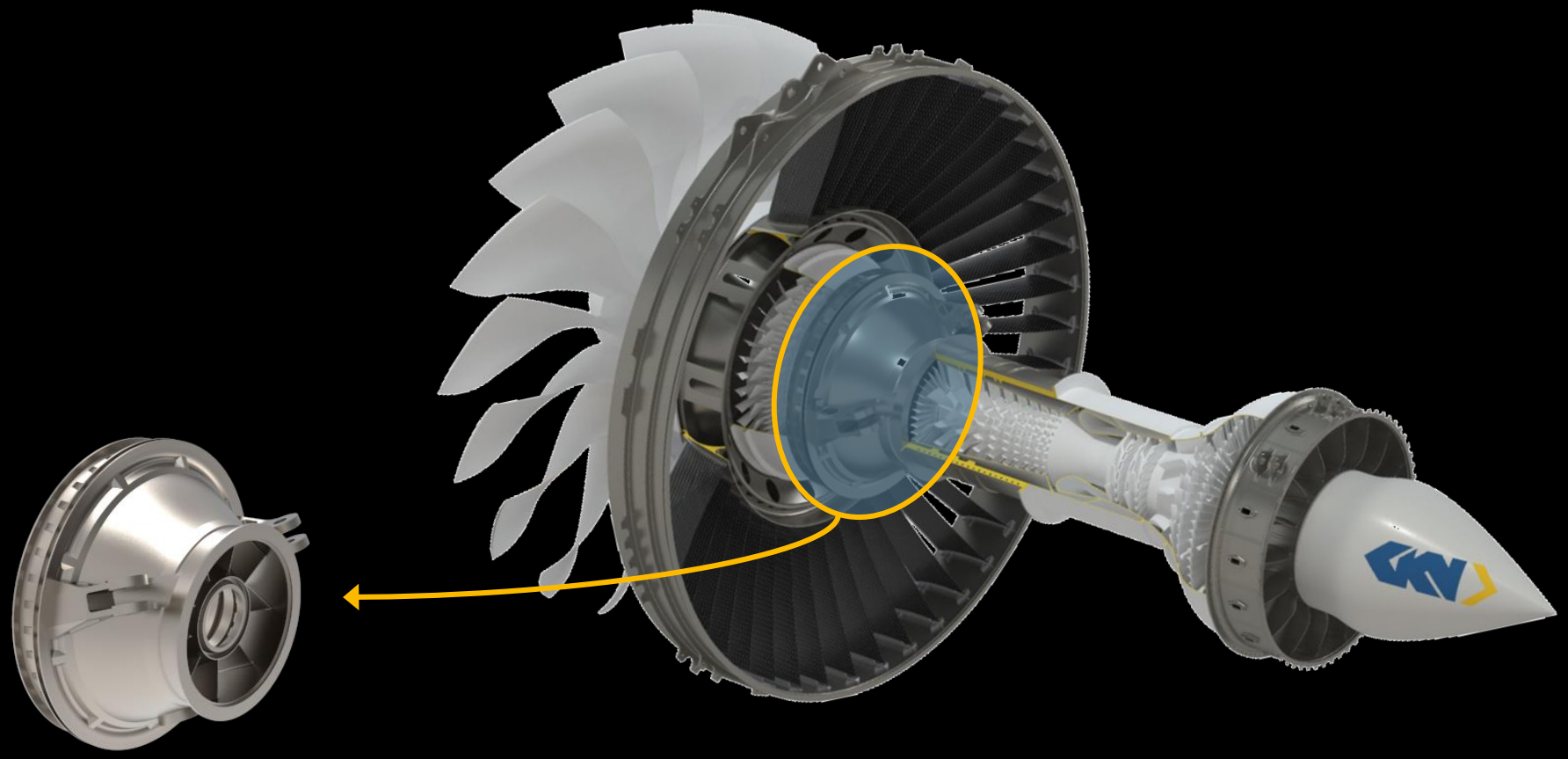

GKN Notional Engine

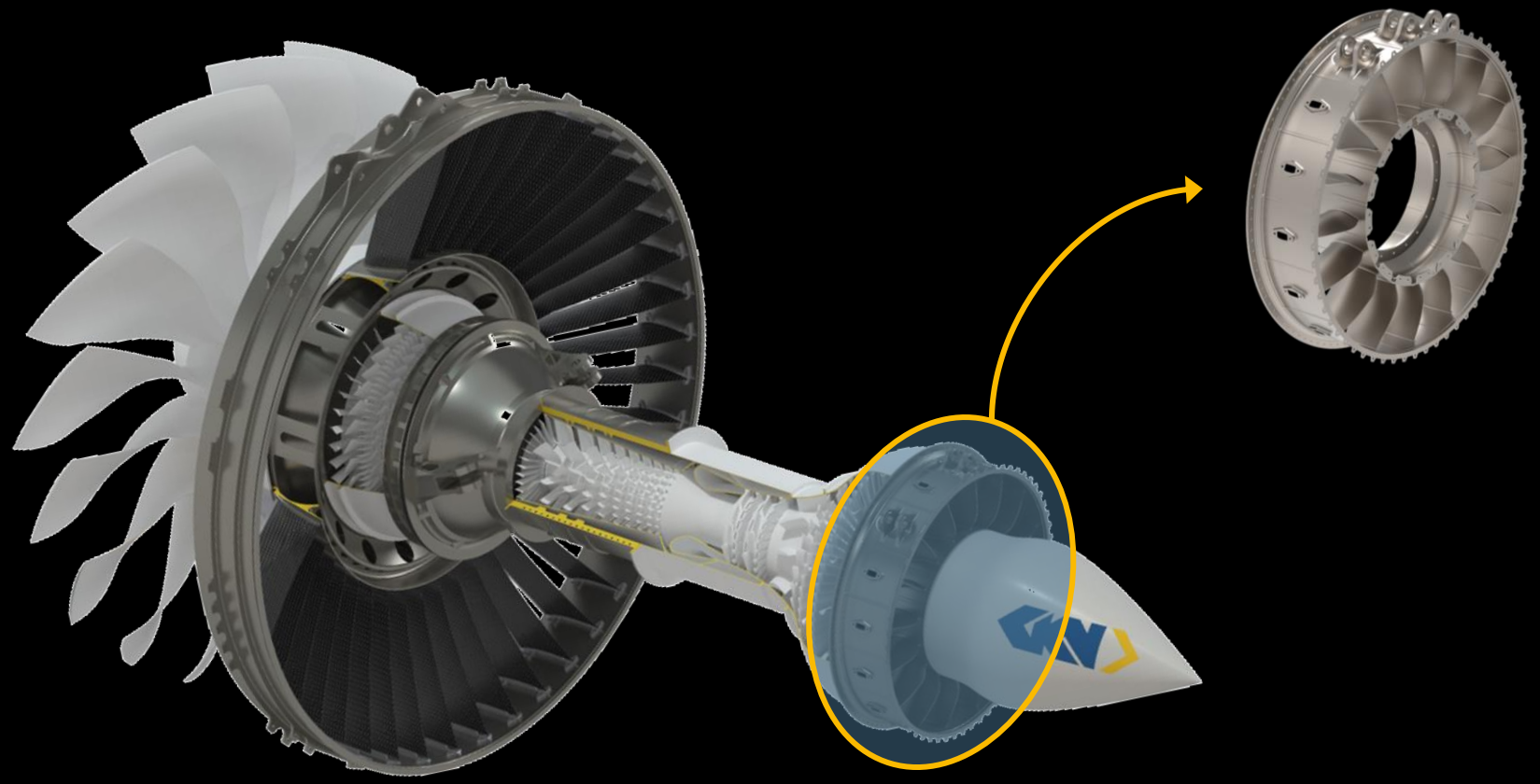

Development Logic – Turbine Frames

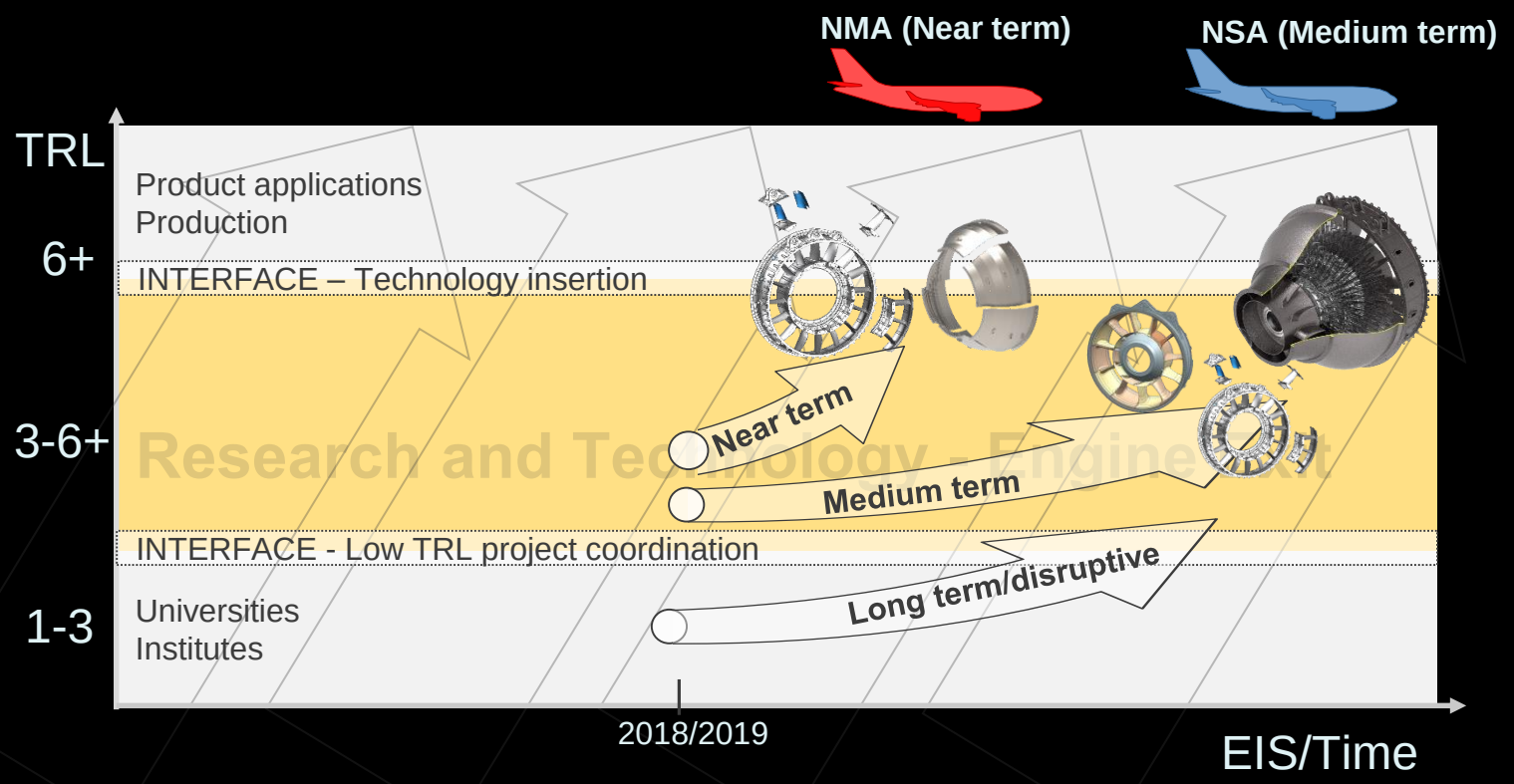

Safran Open Rotor

Safran UHPE (Ultra High Propulsive Efficiency)

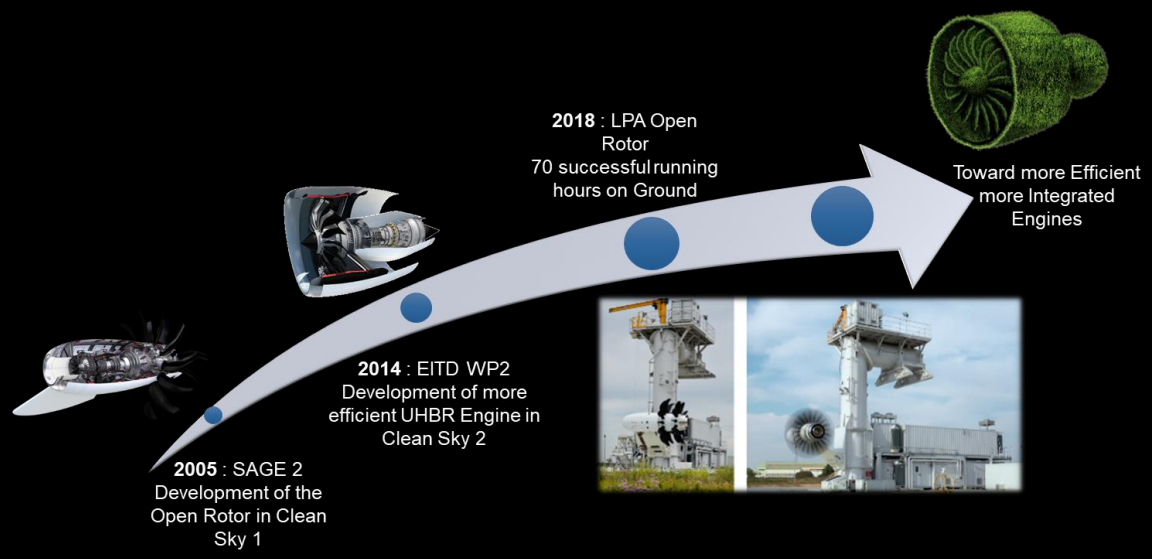

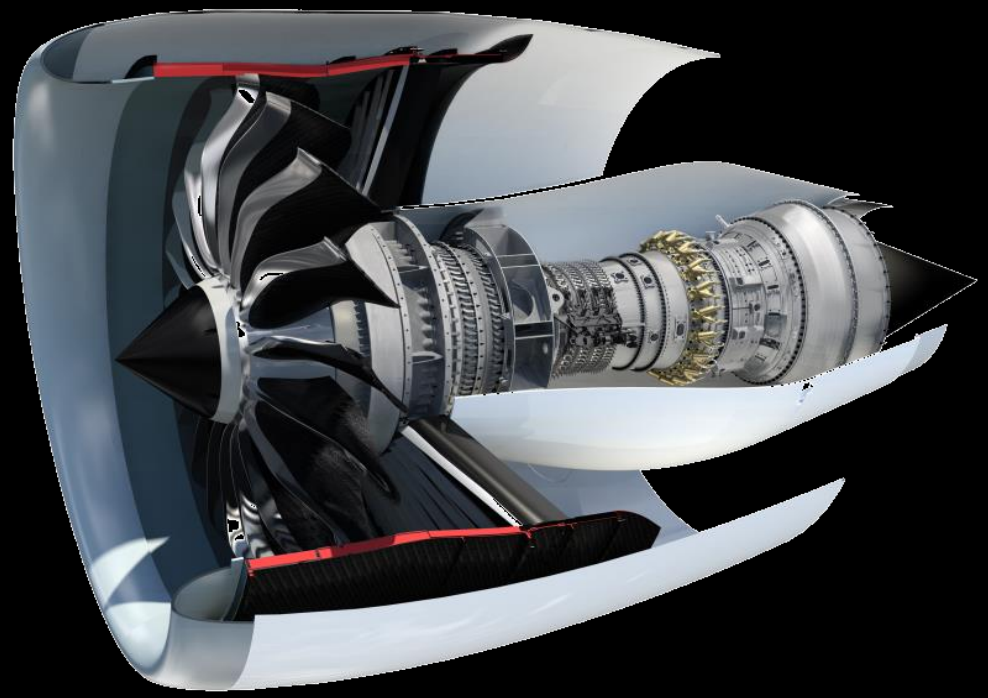

UHPE – Intermediate Compressor Frame

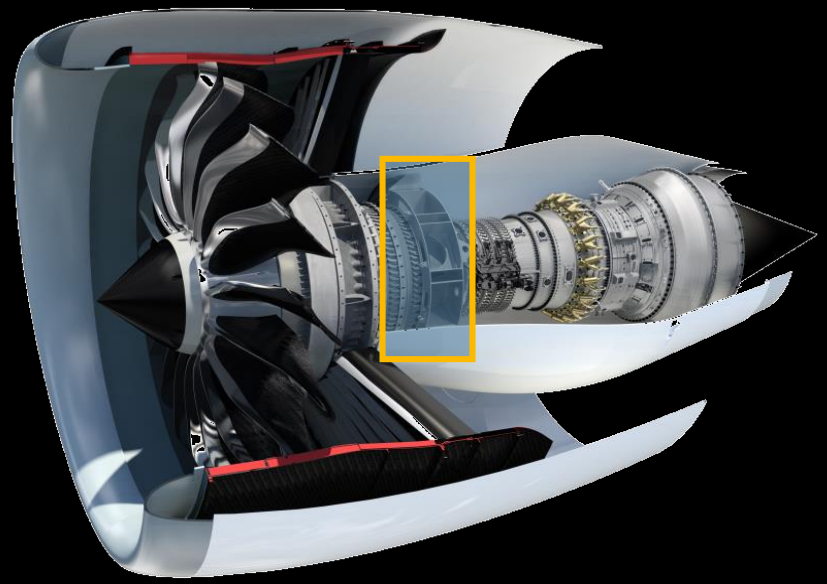

Technology Scope

- Process development
- Inspection methodology
- Surface treatment
- Engineering methods
- Material data
- Specifications
- EBM best-practice
- Feature test

Low-weight structural compressor frame through hybrid composite/metallic fabricated design

- Composite material & supplier
- Composite design system
- Composite manufacturing
- Surface & Fire protection system
- Joining Technologies

UHPR – Turbine Rear Frame

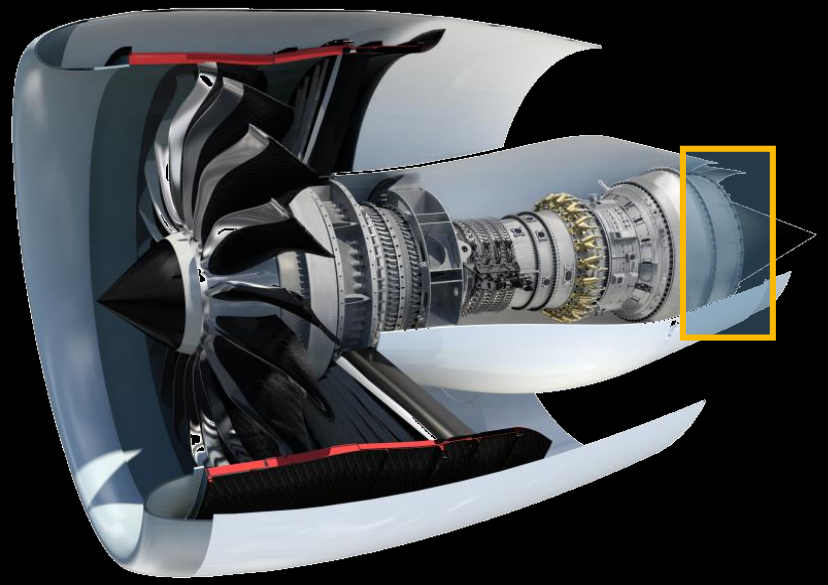

Technology Scope

Robust superalloy fabrication

AM technology maturing through product prototyping and mechanical testing

Testing to validate aerodynamic design space

Multi-objective Design Optimization

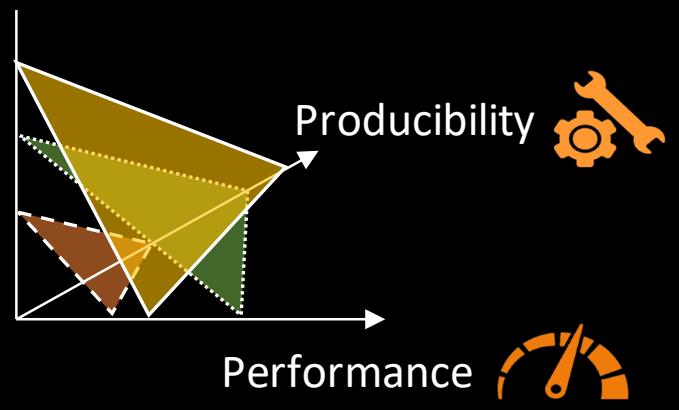

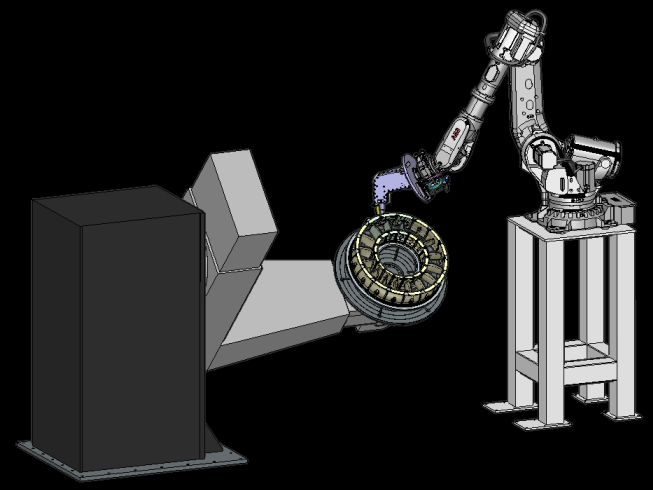

Clean Sky 2

Multi-objective Design Optimization

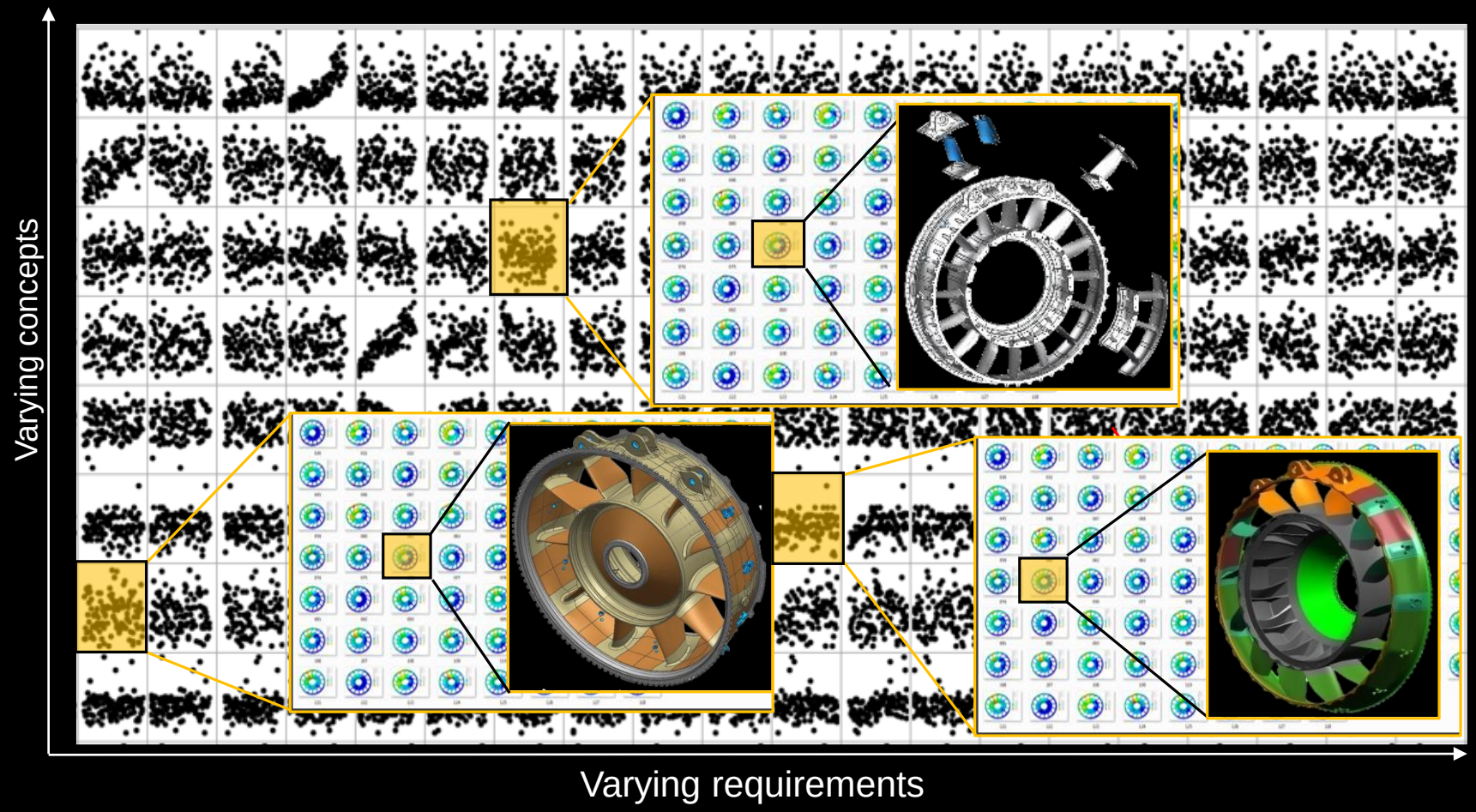

Very High Bypass Ratio – Rolls-Royce UltraFan

Intermediate Compressor Case (ICC)

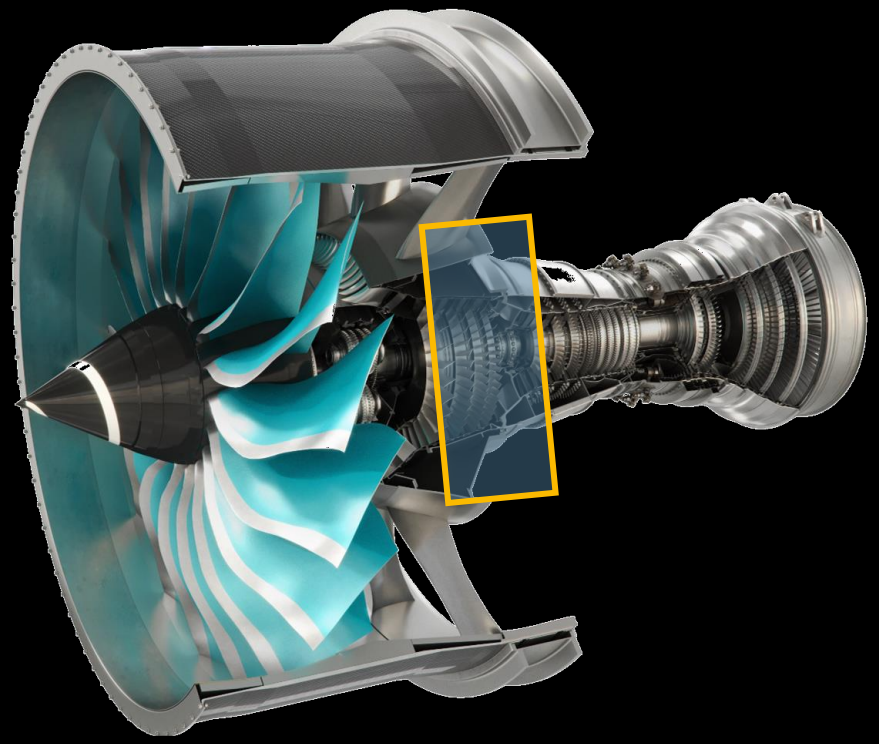

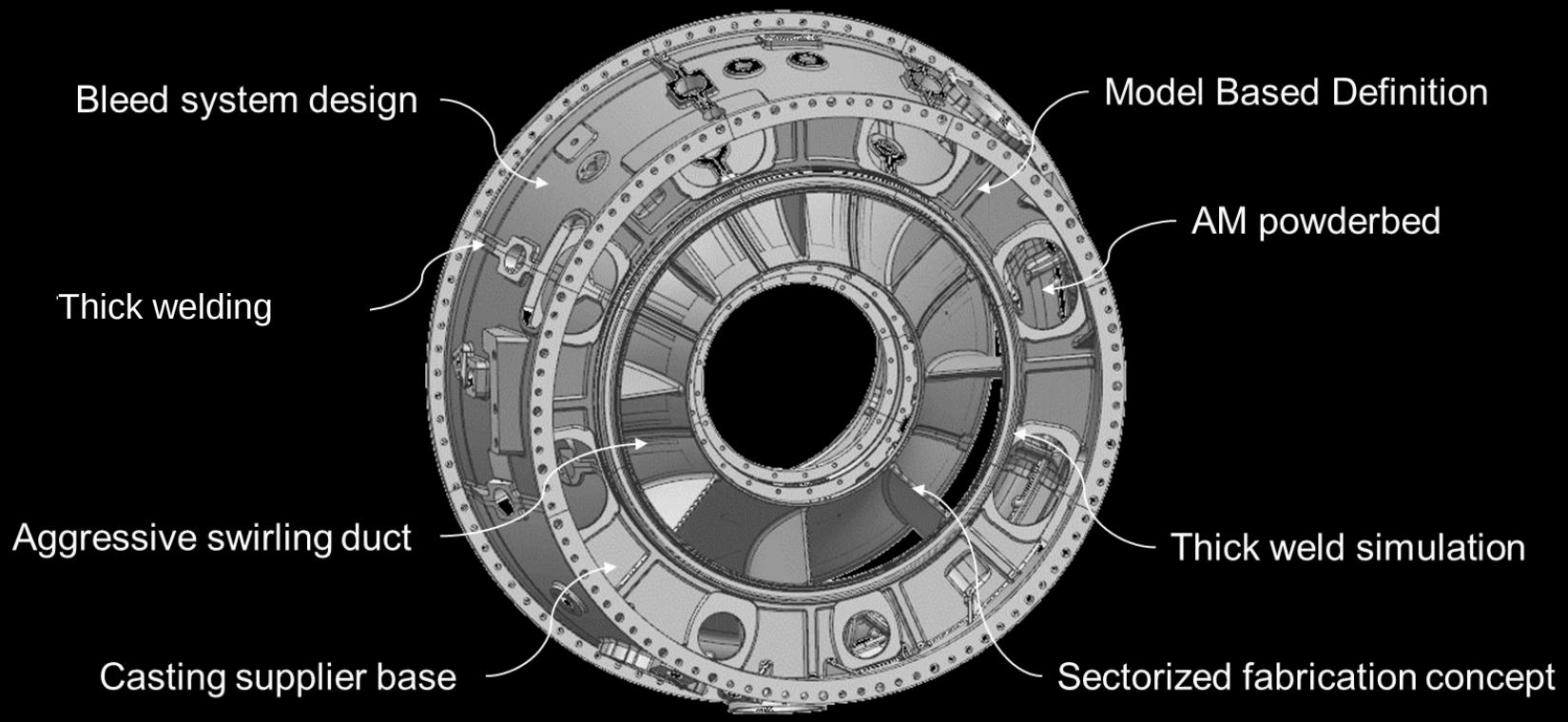
Bleed system design
Model Based Definition
AM powderbed
Thick welding
Aggressive swirling duct
Thick weld simulation
Casting supplier base
Sectorized fabrication concept

MTU - Advanced Geared Engine Configuration

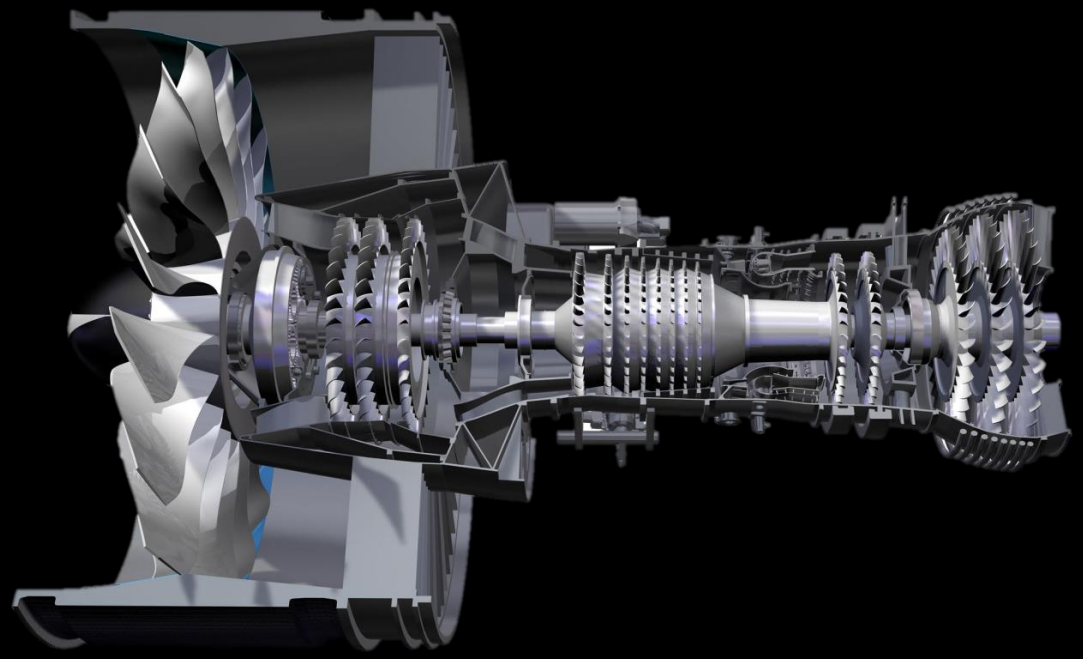

GKN Turbine Exit

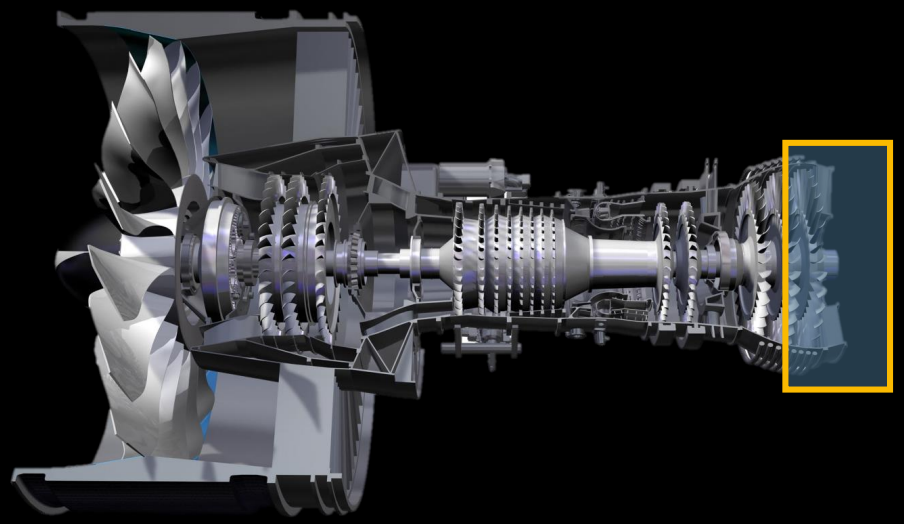

Technology Scope

Superalloy additive manufacturing

Validation of aerothermal function

Optimization methodology for AM

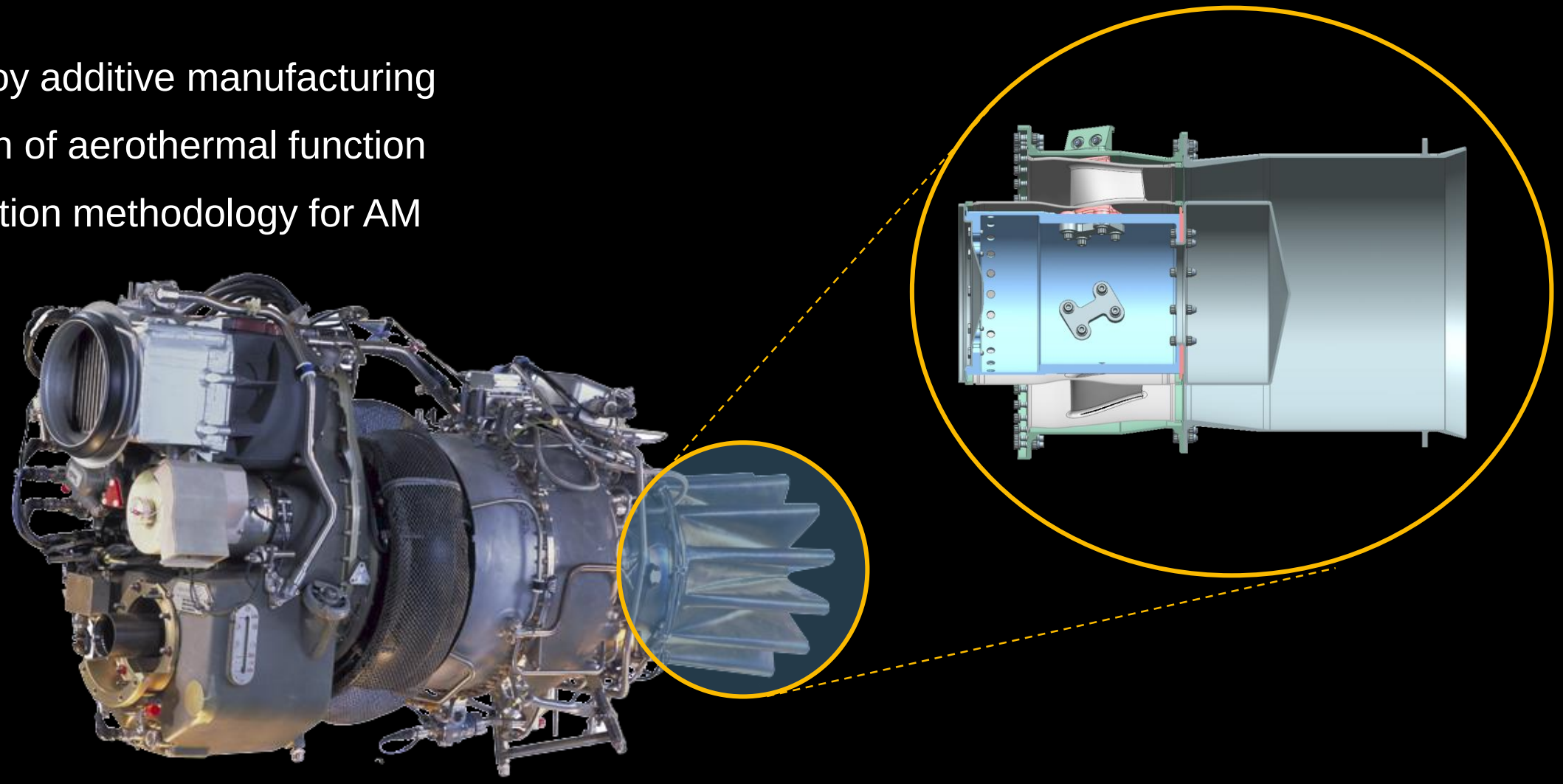

Compression System

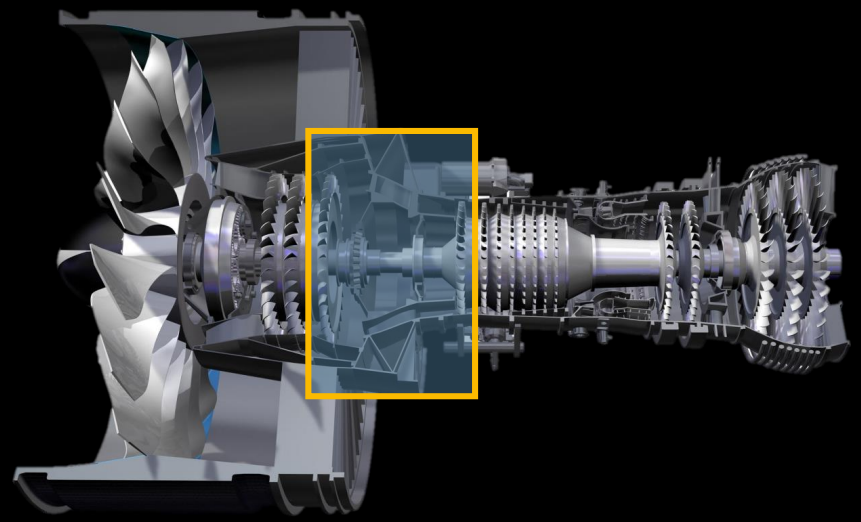

Technology Scope

Reduced module/engine length through integrated design

Increased overall module efficiency through improved & validated design tools

Reduced cost through advanced machining & inspection technology

Increased functionality through efficient bleed system design

Technology Demonstration & Validation Through a Logical Series of Rig Tests

Build 0 – particle separation testing of baseline ICD

Build 1 – exploring the ICD design space by windtunnel tests

Build 2 – 2-spool compressor rig to verify an optimized integrated compression system

Build 3 – quantify the full potential through notional engine

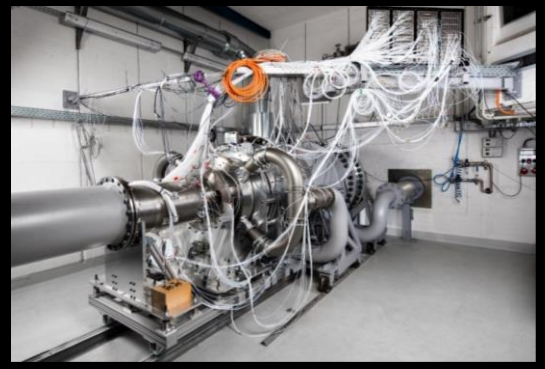

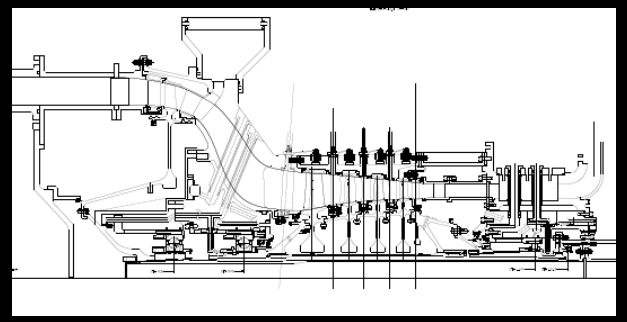

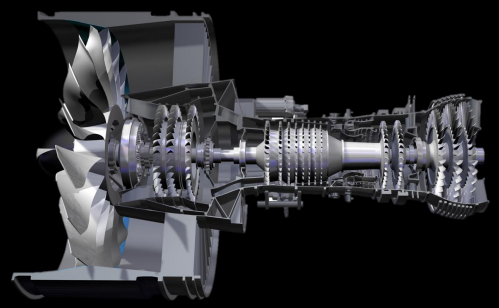

Thank you for your attention!

Questions?